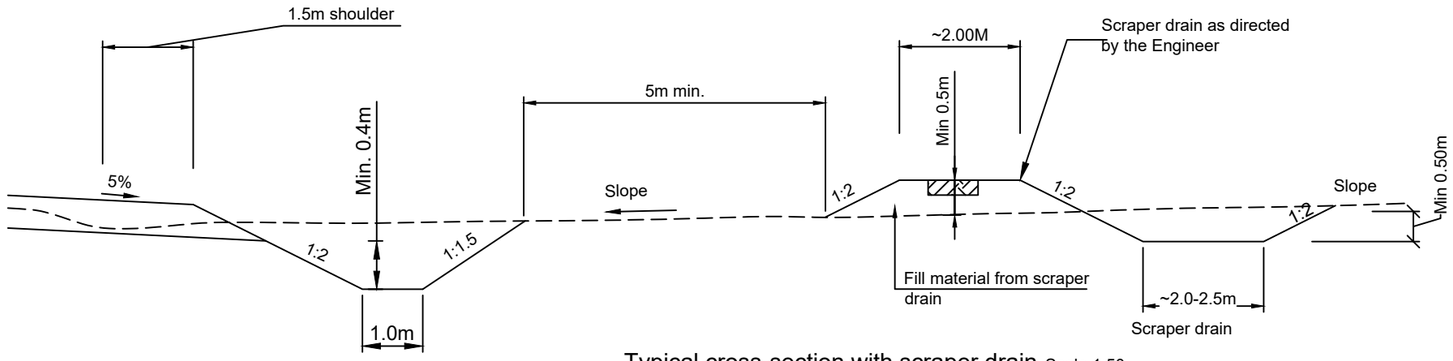


Typical cross-section with scraper drain Scale 1:50

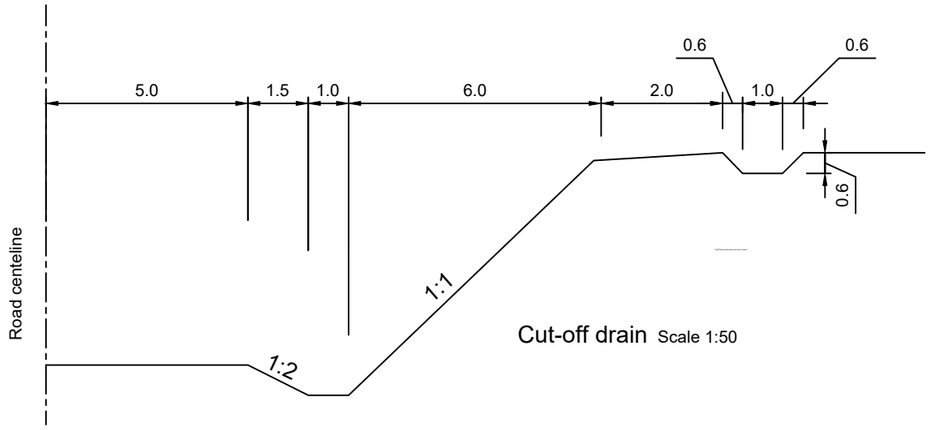


Cut-off drain Scale 1:50

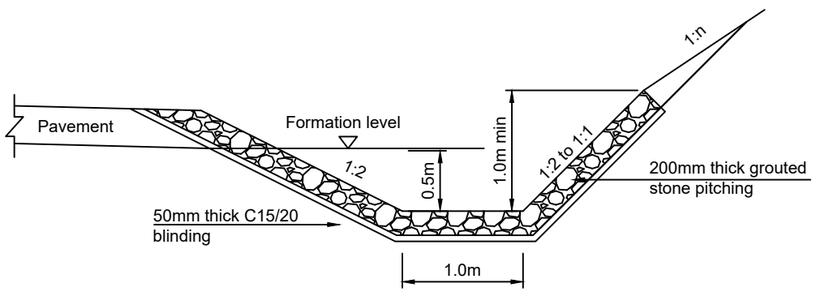


Lined drain Scale 1:50

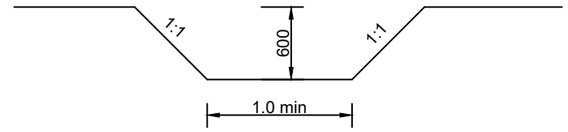


Catchwater drain
Scale 1:50

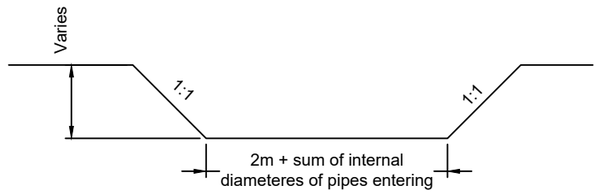


Outfall drain Scale 1:50

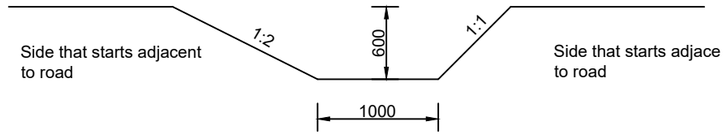


Mitre drain Scale 1:50

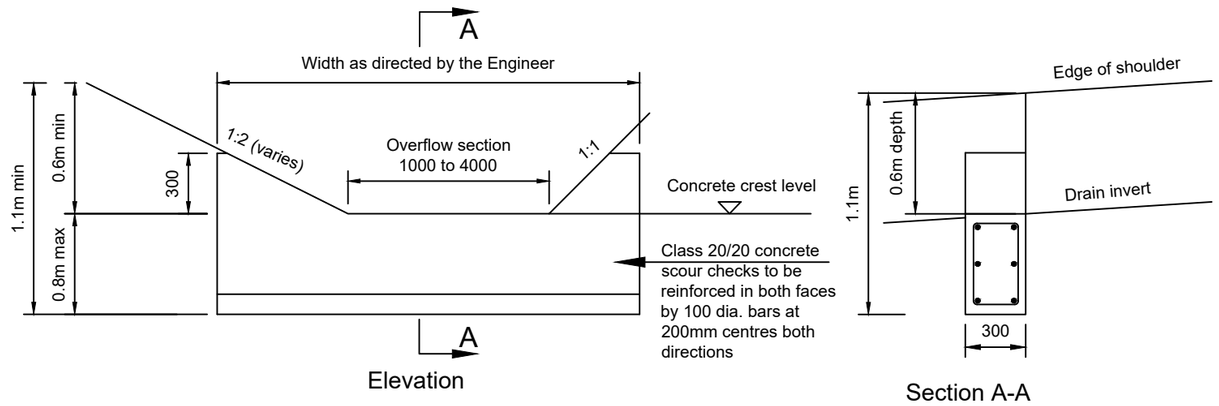


Elevation

Section A-A

Scour check details
Scale 1:30

Notes:
1. All dimensions are in millimetres unless otherwise stated.
2. No dimensions should be scaled from the drawings.

| NO. | AMENDMENTS | DATE | CLIENT: REPUBLIC OF KENYA<br>MINISTRY OF ROADS AND TRANSPORT<br>P.O. BOX 30260-00100<br>NAIROBI | | | STANDARD DRAINAGE DRAWINGS | Cutoff banks, open drains and scour checks | | |
|---|---|---|---|---|---|---|---|---|---|
| | | | | | | | DRAWING NO.: WSCM/23/1/01 | | |
| | | | | | | | Date: Jan. 2024 | Scale: As Shown | Sheet No.: 1/1 |